OWNERS GUIDE

Aquasential™ Select Plus Series™ & Select Series™ Automatic Water Softeners

Models from 2023

P/N 01040692 Rev G
DCO-260066 04/2026
© 2026 Culligan International Company

Analytical Laboratory Services

Water Testing Made Easy.

Culligan's Analytical Laboratory provides its customers with quality water analysis using EPA approved methods. Our Analytical Laboratory is certified by the State of Illinois EPA, to be compliant with the National Environmental Laboratory Accreditation Conference (NELAC) standards. In addition to Illinois chemical certification, our Analytical Laboratory is certified to perform coliform and E. coli testing.

We strive to provide our customers with the testing they need at the lowest possible cost with the quickest turn-around time.

STANDARD WATER TESTING

For sizing systems and general chemical water characteristics.

WELL WATER TESTING

- Basic
- Realtor
- Drilling Surveilance
- Expanded
- Gold

SPECIAL WATER TESTING

- Hemodialysis
- Scale
- Resin
- Organic
- Microbiology
- Membrane

Contact your local Culligan Dealer today to make sure your water is it's best it can be.

1-877-889-8195

E-mail: Water.Analysis@culligan.com

www.culligan.com

Culligan™

Water you love.

Table of Contents

About This Manual....4
Attention Culligan Customer:....5
Thank You!....6
Specifications....7
Application & Operation....9
Menu Navigation....12
Salt Supply....13
Care & Cleaning....14
Sanitizing....16
When & How to Bypass Your System....17
Things to Check Before You Call For Service....18
Performance Data Sheets....19
Records & Data....27
Culligan Limited Warranty....28

About This Manual

Read this Manual First

Before you operate the Culligan® unit, read this manual to become familiar with the device and its capabilities.

Installation or maintenance done on this system by an untrained service person can cause major damage to equipment or property damage. Not adhering to the recommended service/maintenance can cause damage to equipment or property damage.

Safety Instructions and Safety Definitions

Note

NOTE! "Note!" is used to emphasize installation, operation or maintenance information which is important, but does not present any hazard.

Caution

CAUTION!
"Caution" is used when failure to follow directions could result in damage to equipment or property.

Warning

WARNING!
"Warning" is used to indicate a hazard which could cause injury or death if ignored.

The **CAUTION** and **WARNING** paragraphs are not meant to cover all possible conditions and situations that may occur. It must be understood that common sense, caution, and careful attention are conditions which cannot be built into the equipment. These **MUST** be supplied by the personnel installing, operating, or maintaining the system.

NOTE! Be sure to check and follow the applicable plumbing codes and ordinances when installing this equipment.

WARNING! Use protective clothing and proper face or eye protection equipment when handling chemicals or power tools.

Attention Culligan Customer

We encourage Culligan users to learn about Culligan products, but we believe that product knowledge is best obtained by consulting with your Culligan dealer. Untrained individuals who use this manual assume the risk of any resulting property damage or personal injury.

WARNING!
Electrical shock hazard! Prior to servicing equipment, disconnect power supply to prevent electrical shock.

WARNING!
If incorrectly installed, operated, or maintained, this product can cause severe injury. Those who install, operate, or maintain this product should be trained in its proper use, warned of its dangers, and should read the entire manual before attempting to install, operate, or maintain this product. Failure to comply with any warning or caution that results in any damage will void the warranty.

CAUTION!
This system is to be supplied with cold water only.

CAUTION!
This product is not to be used by children or persons with reduced physical, sensory or mental capabilities, or lack of experience or knowledge, unless they have been given supervision or instruction. Children should be instructed not to play with this appliance.

NOTE! **This system is not intended for use with water that is microbiologically unsafe or of unknown quality without adequate disinfection either before or after the system.**

Check with your public works department for applicable local plumbing and sanitation codes. Follow local codes if they differ from the standards used in this manual. To ensure proper and efficient operation of this Culligan product to your full satisfaction, carefully follow the instructions in this manual.

Products manufactured and marketed by Culligan International Company (Culligan) and its affiliates are protected by patents issued or pending in the United States and other countries. Culligan reserves the right to change the specifications referred to in this literature at any time without prior notice. Culligan, Aqua-Sensor, Tripl-Hull, and SoftMinder are trademarks of Culligan International Company or its affiliates.

Culligan International Company
9399 West Higgins Road, Suite 1100
Rosemont, Illinois 60018
1-847-430-2800
www.culligan.com

Thank You!

Welcome To Your New World of Better Living with Culligan Water

Congratulations on selecting the Aquasential™ Select Plus Series™ & Select Series™ Water Softening System. With Culligan's many years of knowledge and experience in water treatment, you can be confident that the model you selected has been designed and engineered to provide years of service with a minimum of care and attention.

If this is your first experience having filtered, conditioned water in your home, you'll love the amazing difference it makes. We promise that you'll never want to be without it again.

The Culligan Aquasential Select Plus Series & Select Series Water Softening System is designed to meet the needs of applications for high quality water. This manual contains important information about the unit, including information needed for installation, operating, and maintenance procedures. A troubleshooting section provides a guide for quick and accurate problem solving.

This manual is based on information available at the time it was finalized, approved, and published. Continuing design refinement could cause changes that may not be included in this publication.

Your local independently operated Culligan dealer employs trained service and maintenance personnel who are experienced in the installation, function and repair of Culligan equipment. This publication is written specifically for these individuals and is intended for their use.

The Culligan Aquasential Select Series 8", 9" S and 8" Outdoor Water Softeners have been tested and certified by WQA against NSF/ANSI 372, CSA B483.1, and NSF/ANSI Standard 44 for the effective reduction of calcium and magnesium (hardness) along with barium and radium 226/228.

The Culligan Aquasential Select Plus Series 9", 10", 10" S, 12", CleanWater Home™ 9" and 10" Water Softeners have been tested and certified by WQA against NSF/ANSI 372, CSA B483.1, and NSF/ANSI Standard 44 for the effective reduction of calcium and magnesium (hardness) along with barium and radium 226/228.

The Culligan Aquasential Select Plus Series 9",10",12" Outdoor and CleanWater Home Series 9",10" Outdoor Water Softeners have been tested and certified by WQA against NSF/ANSI 372, CSA B483.1, and NSF/ANSI Standard 44 for the effective reduction of calcium and magnesium (hardness) along with barium and radium 226/228. See page 8 for full list of models.

Products manufactured and marketed by Culligan International Company (Culligan) and its affiliates are protected by patents issued or pending in the United States and other countries. Culligan reserves the right to change the specifications referred to in this literature at any time, without prior notice. Culligan, Cullar, Filtr-Cleer, Cullneu, AccuSoft, Culligan Man and www.culligan.com are trademarks of Culligan International Company or its affiliates.

Licensed plumbers know that standard industry procedures include only to hand tighten or use strap wrenches on plastic parts. Plastic piping systems must be installed, operated and maintained in accordance with accepted standards and procedures. Not adhering to the recommended service/maintenance can cause damage to equipment or property damage.

Specifications

Culligan Aquasential Select Plus Series Water Softeners

1” Control Valve Models

	9"	10" S	10"	12"
Control Valve Type	**1” 5-cycle Power Valve Reinforced Thermoplastic**	**1” 5-cycle Power Valve Reinforced Thermoplastic**	**1” 5-cycle Power Valve Reinforced Thermoplastic**	**1” 5-cycle Power Valve Reinforced Thermoplastic**
Installation Environment[1]	Indoor/Outdoor	Indoor Only	Indoor / Outdoor	Indoor / Outdoor
Softener Height w/ Control Valve	**54 in.** / 1,372 mm	**49 in.** / 1,245 mm	**63 in.** / 1,600 mm	**61 in.** / 1,549 mm
Media Tank Type	Fiberglass - FRP	Fiberglass - FRP	Fiberglass - FRP	Fiberglass - FRP
Media Tank Dimensions (Diameter X Height)	**9" x 48"** 229 mm x 1219 mm	**10" x 40"** 254 mm x 1016 mm	**10" x 54"** 254 mm x 1372 mm	**12" x 52"** 305 mm x 1321 mm
Salt Storage Tank Specifications (Diameter X Height) / Capacity	**11" x 11" x 36" / 160 lb** 280 mm x 280 mm x 915 mm **16" x 43" / 250 lb** 407 mm x 1,093 mm / 113 kg **18" x 43" / 375 lb** 458 mm x 1,093 mm / 170 kg	**16" x 43" / 250 lb** 407 mm x 1,093 mm / 113 kg	**16" x 43" / 250 lb** 407 mm x 1,093 mm / 113 kg **18" x 43" / 375 lb** 458 mm x 1,093 mm / 170 kg	**16" x 43" / 250 lb** 407 mm x 1,093 mm / 113 kg **18" x 43" / 375 lb** 458 mm x 1,093 mm / 170 kg
Cation Resin, Type and Quantity	Cullex 8% Resin, 1.0 ft^3 or 10% Resin, 1.0 ft^3	Cullex 8% Resin, 1.0 ft^3	Cullex 8% Resin, 1.5 ft^3	Cullex 8% Resin, 2.0 ft^3
Underbedding, Type and Quantity	Cullsan Underbedding, 12 lb	Cullsan Underbedding, 15 lb	Cullsan Underbedding, 15 lb	Cullsan Underbedding, 20 lb
Grains Exchange Capacity @ Salt Dosage Per Regeneration[2]	19,290 grains @ 4 lb 32,099 grains @ 13 lb 35,286 grains @ 17 lb	18,863 grains @ 4 lb 31,389 grains @ 13 lb 34,603 grains @ 17 lb	29,664 grains @ 6 lb 43,694 grains @ 12 lb 47,736 grains @ 18 lb	37,866 grains @ 8 lb 55,815 grains @ 16 lb 65,599 grains @ 24 lb
Efficiency at Rated Salt Dosage[3]	4,501 grains/lb @ 4 lb salt dosage	4,401 grains/lb @ 4 lb salt dosage	4,944 grains/lb @ 6 lb salt dosage	4,733 grains/lb @ 8 lb salt dosage
Freeboard to Media[4]	**14.5 in.** / 368 mm	**13.0 in.** / 330 mm	**15.0 in.** / 381 mm	**16.0 in.** / 406 mm
Freeboard to Underbedding[5]	**44.5 in.** / 1130 mm	**35.0 in.** / 889 mm	**48.0 in.** / 1219 mm	**46.0 in.** / 1168 mm
Rated Service Flow @ Pressure Drop	**9.0 GPM @ 15 psi** 34 LPM @ 103.4 kPa	**7.5 GPM @ 15 psi** 28.4 LPM @ 103.4 kPa	**9.3 GPM @ 15 psi** 35.2 LPM @ 103.4 kPa	**10.0 GPM @ 15 psi** 37.85 LPM @ 103.4 kPa
Total Hardness, Maximum	75 GPG	75 GPG	99 GPG	99 GPG
Total Iron, Maximum (dissolved)[7]	5 ppm	5 ppm	5 ppm	5 ppm
Operating Pressure	**20 - 125 psi** 140 - 860 kPa	**20 - 125 psi** 140 - 860 kPa	**20 - 125 psi** 140 - 860 kPa	**20 - 125 psi** 140 - 860 kPa
Operating Pressure (Canada)	20 - 90 psi **140 - 620 kPa**	20 - 90 psi **140 - 620 kPa**	20 - 90 psi **140 - 620 kPa**	20 - 90 psi **140 - 620 kPa**
Operating Temperature	**33 - 120°F** / 1 - 50°C	**33 - 120°F** / 1 - 50°C	**33 - 120°F** / 1 - 50°C	**33 - 120°F** / 1 - 50°C
Electrical Requirements	24VAC/60 Hz	24VAC/60 Hz	24VAC/60 Hz	24VAC/60 Hz
Electrical Power Consumption, Min./Max.	3 Watts/10 Watts	3 Watts/10 Watts	3 Watts/10 Watts	3 Watts/10 Watts
Drain Flow, Maximum[6]	**2.0 GPM** / 7.6 LPM	**2 GPM** / 7.6 LPM	**2.26 GPM** / 8.6 LPM	**3.96 GPM** / 15 LPM
Recharge Time, Average	55 min.	55 min.	67 min.	55 min.
Recharge Water Consumption	**37.2 gal.** / 140.8 L	**37.2 gal.** / 140.8 L	**48.8 gal.** / 184.7 L	**120 gal.** / 454.2 L

[1] Unit must have Outdoor certification/rating label to be used in an Outdoor installation and requires Culligan Outdoor rated power supply. For Outdoor use with a UL Listed Class 2 Direct Plug-in Power Unit only.
[2] Capacities and corresponding salt dosages pertain to low hardness waters. Capacities listed are per regeneration.
[3] Efficiency rated according to NSF/ANSI Standard 44.
[4] Measured from top of resin bed to top surface of tank threads.
[5] Measured from top of underbedding to top surface of tanks threads.
[6] Backwash at 120 psi (830 kPa).
[7] Not certified by WQA for Iron reduction.

Specifications (cont.)

Culligan Aquasential Select Plus Series Water Softeners

1" Control Valve Models (cont.)			3/4" Control Valve Models	
	CleanWater Home 9"	CleanWater Home 10"	8"	9" S[7]
Control Valve Type	**1" 5-cycle Power Valve Reinforced Thermoplastic**	**1" 5-cycle Power Valve Reinforced Thermoplastic**	**3/4" 5-cycle Reinforced Thermoplastic**	**3/4" 5-cycle Reinforced Thermoplastic**
Installation Environment[1]	Indoor / Outdoor	Indoor / Outdoor	Indoor / Outdoor	Indoor Only[7]
Softener Height w/ Control Valve	**54 in.** / 1,372 mm	**63 in.** / 1.600 mm	**51"** / 1,295 mm	**23"** / 585 mm
Media Tank Type	Fiberglass - FRP	Fiberglass - FRP w/Jacket	Fiberglass - FRP	Fiberglass - FRP with Jacket
Media Tank Dimensions (Diameter X Height)	**9" x 48"** 229 mm x 1219 mm	**10" x 54"** 254 mm x 1372 mm	**8" x 44"** 203 mm x 1,118 mm	**9" x 16"** 229 mm x 406 mm
Salt Storage Tank Specifications (Diameter X Height) / Capacity	**11" x 11" x 36" / 160 lb** 280 mm x 280 mm x 915 mm **16" x 43" / 250 lb** 407 mm x 1,093 mm / 113 kg	**11" x 11" x 36" / 160lb** 280 mm x 280 mm x 915 mm **16" x 43" / 250 lb** 407 mm x 1,093 mm / 113 kg **18" x 43" / 375 lb** 458 mm x 1,093 mm / 170 kg	**11" x 11" x 36" / 160 lb** 280 mm x 280 mm x 915 mm **16" x 43" / 250 lb** 407 mm x 1,093 mm / 113 kg **18" x 43" / 375 lb** 458 mm x 1,093 mm / 170 kg	**13" x 19" / 55 lb** 229 mm x 483 mm / 25kg
Grains Exchange Media, Type and Quantity	Cullex® 8% Resin, 1.0 ft³	Cullex® 8% Resin, 1.5 ft³	Cullex® 8% Resin, 0.72 ft³	Cullex® 8% Resin, 0.37 ft³
Underbedding, Type and Quantity	Cullsan® Underbedding, 12 lb	Cullsan Underbedding, 15 lb	Cullsan Underbedding, 6 lb	None Used
Grains Exchange Capacity @ Salt Dosage Per Regeneration[2]	19,290 grains @ 4 lb 32,099 grains @ 13 lb 35,286 grains @ 17 lb	29,664 grains @ 6 lb 43,694 grains @ 12 lb 47,736 grains @ 18 lb	13,503 grains @ 3 lb 22,469 grains @ 9 lb 24,770 grains @ 12 lb	4,329 grains @ 3 lb 5,484 grains @ 5 lb 6,563 grains @ 7 lb
Efficiency at Rated Salt Dosage[3]	4,501 grains/lb @ 4 lb salt dosage	4,944 grains/lb @ 6 lb salt dosage	4,501 grains/lb @ 3 lb salt dosage	1,443 grains/lb @ 3 lb salt dosage
Freeboard to Media[4]	**14.5 in.** / 368 mm	**15.0 in.** / 381 mm	**21 in.** / 521 mm	**5 in** / 127 mm
Freeboard to Underbedding[5]	**44.5 in.** / 1130 mm	**48.0 in.** / 1219 mm	**42.0 in.** / 1067 mm	N/A
Rated Service Flow @ Pressure Drop	**9.0 GPM @ 15 psi** 34 LPM @ 103.4 kPa	**9.3 GPM @ 15 psi** 35.2 LPM @ 103.4 kPa	**5.9 GPM @ 12 psi** 22.3 LPM @ 82.7 Kpa	**7.6 GPM @ 15 psi** 28.8 LPM @ 103.4 Kpa
Total Hardness, Maximum	75 GPG	99 GPG	75 GPG	30 GPG
Total Iron, Maximum (dissolved)	5 ppm	5 ppm	5 ppm	2 ppm
Operating Pressure	**20 - 125 psi** 140 - 860 kPa	**20 - 125 psi** 140 - 860 kPa	**20 - 125 psi** 140 - 860 kPa	**20 - 125 psi** 140 - 860 kPa
Operating Pressure (Canada)	20 - 90 psi **140 - 620 kPa**	20 - 90 psi **140 - 620 kPa**	20 - 90 psi **140 - 620 kPa**	20 - 90 psi **140 - 620 kPa**
Operating Temperature	**33 - 120°F** / 1 - 50°C	**33 - 120°F** / 1 - 50°C	**33 - 120°F** / 1 - 50°C	**33 - 120°F** / 1 - 50°C
Electrical Requirements	24VAC/60 Hz	24VAC/60 Hz	24VAC/60 Hz	24VAC/60 Hz
Electrical Power Consumption, Min./Max.	3 Watts/10 Watts	3 Watts/10 Watts	3 Watts/10 Watts	3 Watts/10 Watts
Drain Flow, Maximum[6]	**2.0 GPM** / 7.6 LPM	**2.26 GPM** / 8.6 LPM	**1.05 GPM** / 4.0 LPM	**1.29 GPM** / 4.9 LPM
Recharge Time, Average	55 min.	67 min.	55 min.	34 min.
Recharge Water Consumption	**37.2 gal.** / 140.8 L	**50.4 gal.** / 190.8 L	**25.2 gal.** / 95.4 L	**25.0 gal.** / 94.6 L

[1] Unit must have Outdoor certification/rating label to be used in an Outdoor installation and requires Culligan Outdoor rated power supply. For Outdoor use with a UL Listed Class 2 Direct Plug-in Power Unit only.
[2] Capacities and corresponding salt dosages pertain to low hardness waters. Capacities listed are per regeneration.
[3] Efficiency rated according to NSF/ANSI Standard 44 except Select 9" S. The Select 9" S is not efficiency rated according to NSF/ANSI 44.
[4] Measured from top of resin bed to top surface of tank threads.
[5] Measured from top of underbedding to top surface of tanks threads.
[6] Backwash at 120 psi (830 kPa).
[7] System is NOT for sale in California.

Application & Operation

It's All So Easy, So Economical, So Efficient, So Enjoyable!

Kind To Skin And Complexion

Soft water will help prevent red, itchy or dry skin because there are no hardness impurities to cause soreness, no soap curd to coat the skin. Shaving is easier, smoother - either with a blade or electric shaver.

Bathing And Showering

You'll use far less soap with conditioned water. Use your soap very sparingly - not as you did before soft water. Just a quick rinse removes all lather, leaving your skin pleasantly smooth and silky because now it's free of sticky soap curd and film.

Saves Washing Costs. Helps Control Environmental Pollution

Soft water washes whiter and cleaner with less soap or detergent. Because the hardness impurities are removed, your soap can concentrate solely on washing. People usually find that they can reduce the amount of soap they use substantially. If you normally use a cup per wash load with hard water, try using 1/3 cup depending on the size of your wash load and the degree of soil. Different amounts are required, but you can use less with softened water. An added bonus is the fact that your washable fabrics will last longer.

Super Hair Conditioning

Soft water is great for scalp and hair care. No insoluble deposits are formed. Hair is shinier, softer, more manageable. Reduce the amount of shampoo you have normally used.

Dishes Are A Delight

Washed by hand or in a dishwasher, glassware, dishes, and silver wash cleaner and easier. Follow your dishwasher manufacturer's instructions. Soft water promotes sanitation because no greasy hard water film can form to collect or harbor bacteria.

Easier Housekeeping, Gleaming Fixtures

You'll be amazed at the marvelous difference. Just a swish of the cloth, and the bathtub or shower and fixtures are clean and sparkling. Imagine, no scouring! No hard water scum to cause rings, streaks, spots, and stains. To keep their gleaming luster, simply wipe fixtures with a towel after use. Formica, tile, walls, floors, woodwork surfaces clean easier, stay clean longer. You'll save on cleaning aids and save on time.

Saves Water-Heating Energy, Helps Water-Using Appliances

Soft water reduces the formation of rock-like hard water scale that encrusts water heaters, hot water pipes, shower heads, and water-using appliances. This scale can cause premature maintenance and failure.

Elimination of hard water also provides substantial energy savings because scale acts as an insulator, wasting electricity or gas used to heat water.

Water For Lawns And Household Plants

If possible, lawn sprinkling faucets should be supplied with hard water primarily because it is not economical to soften so much water.

Household plants are much more sensitive than lawns with respect to the kind of water which is best. First, because they receive no rainfall and, second, there is little or no drainage of the soil. Preferably they should be watered with rainwater or water which is low in mineral content such as distilled or demineralized water. Softened water is not recommended for house plants because a build-up of sodium in the soil may interfere with efficient absorption of water by the plant root system. Additional information may be obtained from your independently operated Culligan dealer.

Why Water Gets Hard And How It Is Softened

All of the fresh water in the world originally falls as rain, snow, or sleet. Surface water is drawn upward by the sun, forming clouds. Then, nearly pure and soft as it starts to fall, it begins to collect impurities as it passes through smog and dust-laden atmosphere. And as it seeps through soil and rocks it gathers hardness, rust, acid, unpleasant tastes and odors.

Water hardness is caused primarily by limestone dissolved from the earth by rainwater. Because of this, in earlier times people who wanted soft water collected rainwater from roofs in rain barrels and cisterns before it picked up hardness from the earth.

Some localities have corrosive water. A softener cannot correct this problem and so its written warranty disclaims liability for corrosion of plumbing lines, fixtures or appliances. If you suspect corrosion, your Culligan dealer has equipment to control the problem.

Iron is a common water problem. The chemical/physical nature of iron found in natural water supplies is exhibited in four general types:

1. **Dissolved Iron** – Also known as ferrous, soluble or clear water iron. Dissolved iron is soluble in water and is detected by taking a sample of the water to be treated in a clear glass or white Styrofoam cup. The water is initially clear, but on exposure to the air it may gradually turn cloudy or colored as the iron oxidizes. Up to 5 ppm of this type of iron can be removed from the water by the same ion exchange principles that remove the hardness elements of calcium and magnesium. Dissolved iron is the only type of iron a water softener will reliably remove.

2. **Particulate Iron** - Also known as ferric iron or, rust. This type of iron is an undissolved particle of iron. A softener will trap some of the larger particles of iron, but many will not be flushed out of the resin bed during the regeneration cycle. This will eventually lead to an accumulation of particulate iron in the resin bed and to service and foul the ion exchange resin. A pre-filter will be required to remove this type of iron prior to the water softener.

3. **Organic Bound and Colloidal Iro**n – Organically bound iron is strongly attached to organic matter in the water. The ion exchange process alone cannot break this attachment and the softener will not reduce it. Colloidal particles will also not exchange onto softening resin are too small to be removed by conventional filtration.

4. **Bacterial Iron** - This type of iron is protected inside a bacteria cell. Like the organic bound iron, it is not removed by a water softener.

When using a softener to remove both hardness and dissolved iron it is important that it regenerates more frequently than ordinarily would be calculated for hardness removal alone. Although many factors and formulas have been used to determine this frequency, it is recommended that the softener be regenerated when it has reached 50–75% of the calculated hardness alone capacity. This will minimize the potential for bed fouling. (Iron removal claims have not been verified by the Water Quality Association.)

If you are operating a water softener on clear water iron, regular resin bed cleaning is needed to keep the bed from coating with iron. Even when operating a softener on water with less than the maximum of dissolved iron, regular cleaning should be performed. Clean every six months or more often if iron appears in your conditioned water supply. Use resin bed cleaning compounds, carefully following the directions on the container.

NOTE! **Do not use where the water is microbiologically unsafe or with water of unknown quality without adequate disinfection before or after the unit.**

The Culligan Process

Your Culligan water conditioner consists of three basic components, (A) the Control Valve, (B) the Mineral Tank, and (C) the Brine System.

A. Control Valve

The exclusive Culligan control valve automatically performs a variety of tasks that are necessary for the proper operation of your water conditioner. These tasks, commonly referred to as cycles or operating positions, are **Service, Regeneration,** and **Brine Refill**.

1. **Service:** While the control valve is in the service cycle, hard water is directed down through the column of Cullex® resin where hardness minerals are removed from the water. The softened water is then directed into your household plumbing lines. The ability of the Cullex resin to remove hardness minerals needs to be periodically replenished; this is referred to as Regeneration.
2. **Regeneration:** While the control valve is in the regeneration cycle, water is first directed up through the column of Cullex resin to flush accumulated sediment out of the resin and down the drain. Then, the regenerant brine solution is slowly drawn from the bottom of the salt storage tank of the Brine System and is directed down through the column of Cullex resin, restoring the ability of the resin to remove hardness minerals from your water supply. Once completed, the regeneration cycle is followed by Brine Refill.
3. **Brine Refill:** While the control valve is in the brine refill cycle, a predetermined amount of water is directed to the salt storage tank of the Brine System so that additional salt can be dissolved to provide the brine solution that will be needed for the next regeneration cycle.

B. The Mineral Tank

The Mineral Tank contains the Cullex resin column, Cullsan® underbedding, and an outlet manifold. The number of gallons of hard water that can be softened by the Cullex resin column before it needs regeneration is called the “capacity” of the resin column, and depends upon the amount of hardness minerals in each gallon of water (expressed as grains per gallon) and upon the amount of regenerant brine solution (expressed as pounds of salt) passed through the resin column during regeneration.

Your Culligan service person, taking into account the hardness of your water and the amount of softened water your household may reasonably expect to use each day, has carefully established how often the softener will regenerate and how much salt will be used for each regeneration. This will ensure that all of your soft water needs will be fulfilled without using an excessive amount of salt.

C. The Brine System

The Brine System consists of a salt storage container and hydraulic Dubl-Safe™ valve. The salt storage container holds the salt that is used to make the regenerant brine solution. The hydraulic Dubl-Safe valve limits the amount of water that is returned to the salt storage tank during the brine refill cycle.

Because a predetermined amount of salt is dissolved with each brine refill cycle, the salt must be periodically replenished in order to maintain efficient operation. Your Culligan service person will be able to tell you about how often salt must be added to the salt storage container.

Menu Navigation

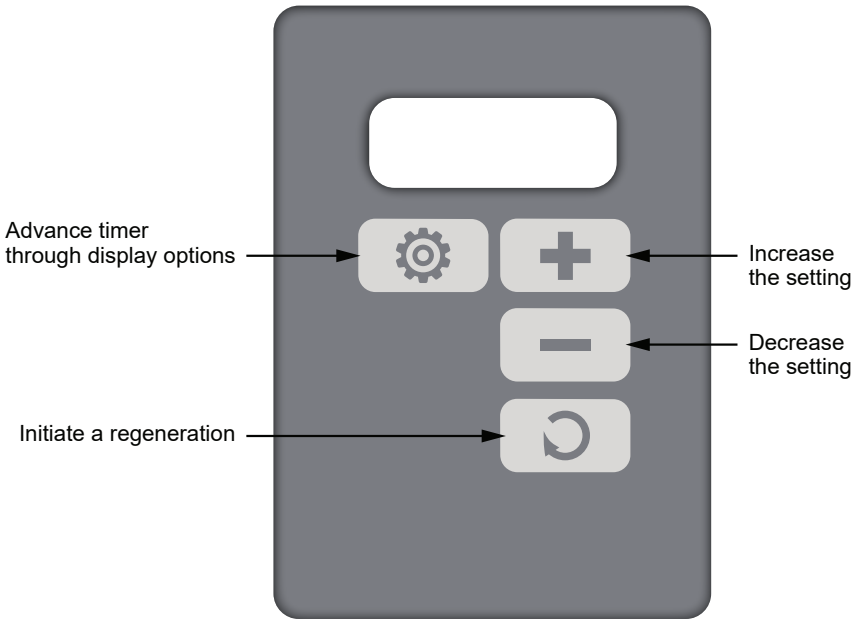

The programming menu for Select is outlined in the following table.

Table 1. Setting Time of Day

Setting	Display	Range Limits	Default
Time of Day	tod 12:00	12:00 AM - 11:59 PM (12 hr) 00:00 - 23:59 (24 hr)	12:00 PM 12:00
*Time of Regeneration	tor 2:00	12:00 AM - 11:30 PM (12 hr) 00:00 - 23:30 (24 hr)	2:00 AM 02:00

Regeneration

There are several conditions that will cause the control to initiate a regeneration cycle. The “REG” annunciator will light when the control has signaled for a regeneration. The “REG” annunciator will flash while the control is in regeneration.

The following are conditions that will call for regeneration:

1. When the flow meter has recorded the passage of a predetermined number of gallons.
2. At the preset time, when the number of days without a regeneration is equal to the Timeclock Backup setting.
3. At the preset time, when the button on the bottom right button of the keypad is depressed once. “REG” will light.
4. Immediately, when the bottom right button of the keypad is depressed for three seconds. “REG” will light and blink.
5. Immediately, if power to the unit has been off for more than 3 hours and time of day has been restored.

Salt Supply

Salt is the mineral used to “recharge” your water conditioner. A brine solution is automatically made up in the bottom of the salt storage container, the Cullex® resin beads in the mineral tank are flushed with the brine solution as a step in the recharging process.

Your Culligan Water Conditioner has been carefully designed to get the greatest amount of softening capacity from the salt it uses. Here is some pertinent information about salt usage, types and service.

Salt Economizer

This control is set at the time of installation, and determines salt usage according to the water hardness, number of persons in the household, and water usage.

What Kind of Salt is Best

All Culligan Water Conditioners are designed to use any water conditioner salt of good quality, including rock, pellet, solar, or evaporated types.

All rock salt, regardless of source, contains insoluble material which collects at the bottom of the salt storage tank and requires periodic clean-out.

If purified salt products are used, the salt storage compartment will require less frequent clean-out, but you must check more frequently for bridging.

Regardless of what type of salt is used, we recommend Culligan Brand Salt as suggested by your Culligan Dealer. They are the expert and can provide you with the best product for your Culligan Water Conditioner.

Automatic Salt Delivery Service

Ask your Culligan Dealer for details about salt delivery service. You can have your salt supply replenished on a regular basis. Whether you have automatic delivery service or pick up salt from your Culligan Dealer, you will be getting quality salt packaged according to rigid Culligan specifications. Using Culligan Brand Salt will help assure continued efficiency and trouble-free operation of your water conditioner.

Care & Cleaning

These simple precautions, if followed, will help assure continued trouble-free service and keep your Culligan Water system looking like new for years.

- Use only mild soap and warm water when cleaning the exterior of the conditioner. Never use harsh, abrasive cleaning compounds or those which contain acid, such as vinegar, bleach and similar products.
- **Important:** Protect your water system and the entire drainline from freezing temperatures.

  WARNING!
  If your unit should freeze, do not attempt to disassemble it. Call your Culligan Dealer.

- **Important:** Culligan water systems are sold for use with potable water, only. If at any time the water becomes contaminated, such as during a “boil water” situation, the operation of the water system should be discontinued until it is verified that the water is again potable. To do this, turn the knob on the bypass valve to the bypass position. Then, call your Culligan dealer to have your system sanitized before it is placed back into service.
- Do not place heavy objects on top of the salt storage tank or timer cover.

Following the manufacturer’s instructions regarding operation, maintenance and replacement requirements, including replacement of filters if applicable, is essential for Culligan’s products to perform as advertised.

Should service, adjustment, or trouble-shooting information be needed which is not covered in this Owners Guide, or if you have further questions, call your Culligan Dealer.

Cleaning Out the Salt Storage Tank

A periodic clean-out of the Salt Storage Tank is necessary to keep your Culligan Water Softener at peak operating efficiency. Do it after several years when the salt supply is low.

Follow these step-by-step procedures:

Tools needed:

- Scoop
- Clean, bucket-size container
- Phillips-head screwdriver
- Garden hose, Household scrub brush or sponge

1. Remove the salt storage tank cover and the cap from the brine valve chamber.
2. Disconnect the brine line from the brine valve by holding in the outer ring of the push fitting, then pushing the tubing in slightly before pulling it out.
3. Remove the nut securing the brine valve to the brine chamber, then lift the brine valve out of the brine valve chamber and set aside in an upright position.
4. If you'd like to save any clean, dry salt remaining in the tank, remove it and place it in a clean container.
5. Using the scoop, dig out and discard as much remaining salt, water and debris as possible.
6. Remove the brine valve chamber by removing the chamber retaining screw and nut.
7. Remove the salt plate at the bottom of the tank.
8. Lay the salt tank on its side and direct a brisk stream of water from your garden hose to its inside to rinse out all residue.
9. Using a household scrub brush and a mild soapy solution, clean the salt plate.
   This will complete the tank cleaning.
10. Re-insert the brine valve into the chamber, re-insert the brine line fully, and replace brine valve chamber cap.
11. Stand salt tank upright. Make sure to place the tank on a flat, smooth, solid surface.
12. Replace the salt plate. Place brine valve chamber in position and affix with screw and nut.
13. Insert the brine valve into the chamber and replace brine valve chamber cap.
14. Fill the salt storage tank with 4 to 6 inches of water.
15. Fill the tank with salt to within a few inches of the top.
16. Replace salt storage tank cover.

Troubleshooting

The Culligan Select Plus & Select Series Softener is equipped with an advanced error detection system. During all operating modes the softener's electronics are performing self-diagnostics to ensure that the unit is operating correctly. There may be times, however, when something may occur that could cause the unit to improperly operate. In those instances the microprocessor will identify the exact problem and alert the user with a telephone handset symbol in the upper left corner of the display and the error code will be shown.

For any additional troubleshooting or service needs please contact your local Culligan dealer.

Sanitizing

A water softener in daily use on a potable water supply generally requires no special attention other than keeping the salt tank filled. Occasionally, however, a unit may require sanitization under one of the following conditions:

- At start-up time.
- After standing idle for a week or more.
- On private supplies, the appearance of off-tastes and odors, particularly if musty or “rotten egg” (caused by harmless sulfate-reducing bacteria).

NOTE! **If the water supply contains iron, regenerate the softener before sanitizing to remove iron from the resin.**

CAUTION!
Hazard from toxic fumes! Chlorine bleach and common iron control chemicals may generate toxic fumes when mixed.

CAUTION!
Do not use this procedure if the softener salt contains iron control additives.

If the unit uses any compounds containing sodium hydrosulfite, sodium bisulfite, or any other reducing agent, disconnect the device feeding the chemical(s) and manually regenerate the unit before sanitizing.

Do not use this procedure if the softener salt contains iron control additives.

1. Remove the brine tank cover.
2. Pour directly into the brine chamber 1/3 to 1/2 cup of unscented 6% household bleach for each cubic foot of resin in the tank.
3. Manually start recharge. Allow the unit to complete the recharge cycle automatically.

If tastes and odors return frequently, even after sanitization, a continuous chlorination system may be needed. Send a water sample to a qualified laboratory for bacterial analysis.

When & How to Bypass Your System

There are times when the water softener may need to be bypassed using the Universal Bypass Valve.

1. If softened water is fed to your outside lines, you may wish to bypass your Culligan system so that softened water is not used for watering the lawn or other outdoor vegetation.
2. If you will be away for an extended period of time and don't want the unit to regenerate.
3. If you notice any unexpected water on the floor around your system or continuous flow from the drain line not during normal regeneration times, bypass your system and contact your local Culligan dealer.
4. In the event that your whole home water shut-off fails, you can turn the Universal Bypass to the "OFF" position and stop flow through the home occurring after your Culligan system.

Bypass Valve Icon Indicators

There are three different icons that will be visible on the bypass valve to indicate the position of the valve.
(see Figure 1)

Figure 1. Position Indicator Icons

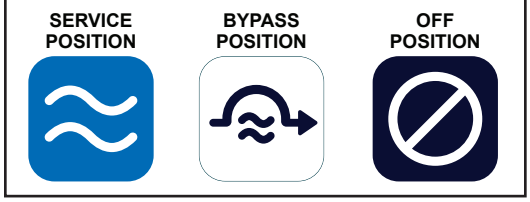

Service Position

In the back of the Culligan water softener is a Universal Bypass Valve. In the Service position with the "SERVICE" icon visible, the water flows through the bypass and through the softener providing soft water. (see Figure 2)

Figure 2. Bypass Valve in SERVICE Position

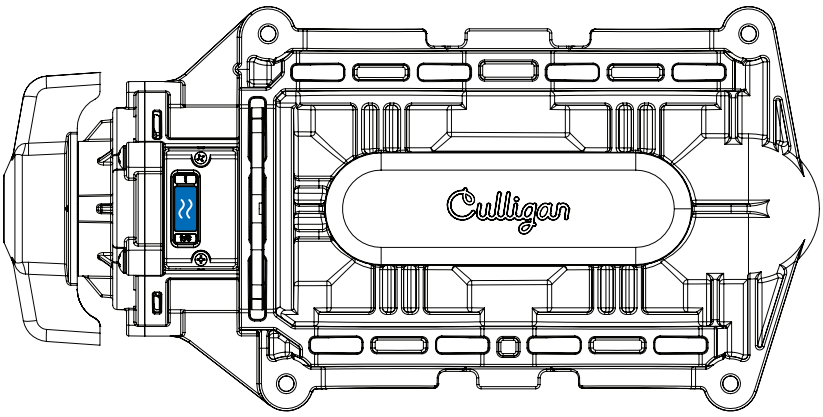

Bypass Position

To bypass the Culligan system, rotate the gray handle counterclockwise until it stops and the "BYPASS" icon is visible. This will stop water flow through the Culligan system, but not disrupt water service to the home. (see Figure 3)

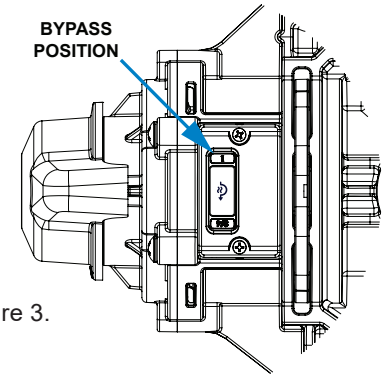

Figure 3.

Off Position

To turn water off completely, rotate the gray handle clockwise until it stops and the "OFF" icon is visible. This will stop all water flow through your Culligan system as well as to the entire home. (see Figure 4)

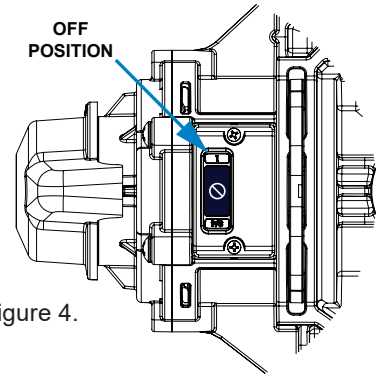

Figure 4.

Return to Service Position to Softened Water

To return your Culligan system from the "BYPASS" Position to the "SERVIC:E" position, rotate gray handle clockwise (approximately 3/4 of a turn) until the "SERVICE" icon is fully visible.
To return your Culligan system from the "OFF" position back to the "SERVICE" position, rotate the gray handle counterclockwise until the "SERVICE" icon is fully visible.
(see "Figure 2. Bypass Valve in SERVICE Position")

Things to Check Before You Call For Service

If you unexpectedly experience a change in the quality of your water, make these simple checks before calling your Culligan dealer. One of the following conditions may be the reason for the change.

Power Supply

Check your power supply cord. Is it plugged fully into the electric outlet? Be certain that the outlet is not controlled by a wall switch which has been turned off. Reset softener to proper time of day and then plug in if the power supply was compromised.

Tripped Circuit Breaker

Check the house circuit breaker panel. Reset a tripped circuit breaker. Reset timer to proper time of day.

Power Failure

An extended power disruption or daylight savings time could alter the time of regeneration due to incorrect time of day displayed on your Culligan unit. Reset "Time of Day" following the step by step instructions printed on the cover of the unit below the display or in “Table 1. Setting Time of Day” on page 12. An optional battery back-up may be added to maintain time of day during prolonged power outages. Please contact your local Culligan dealer for further information.

Bypass Valves

Check to see if they are in the proper position. Universal Bypass, if used, should be in the “SERVICE” position (see Figure 2). If hand valves are used, see that inlet and outlet valve are opened and that the bypass valve is closed.

No Water

If you aren’t getting any water flow at all, make sure your water supply is working. Open a tap ahead of the softener (outside tap) to see if you have any water pressure. If you have water pressure, check the bypass valve. If it is in the Service position, put it into the bypass and call your Culligan dealer for service.

Increased Usage

Guests, family additions, new water-using appliances, etc., all will result in more water usage and will require more capacity from your softener. You can reprogram your recharging schedule by following the directions on “Menu Navigation” on page 12. Call your Culligan dealer for advice and save a service call.

Salt Supply

Check it. Refill if necessary and wait approximately 4 hours for salt to dissolve before initiating a recharge cycle.

Salt Bridging

Salt bridging occurs when a space is formed between the salt and the water underneath, preventing the salt from dissolving to make brine. No brine, no soft conditioned water!

High humidity and/or use of some brands of purified salt products may cause a salt bridge to form.

The best way to check and eliminate a salt bridging problem is to take a broom handle, or similar instrument, and make a mark 34 inches from the end, then carefully begin to probe down through the salt with the instrument. Should an obstruction be found before the mark on your instrument reaches the rim of the salt storage tank, a salt bridge is likely to have formed. Continue to probe and break the salt bridge completely.

CAUTION!
Do not force the implement past the mark as damage to the horizontal salt plate may occur.

Performance Data Sheets

Culligan Aquasential Select Series 8" and 8" Outdoor Water Softener

Culligan knows the more informed you are about your water treatment systems, the more confident you will be about its performance. It's because of this and more than seventy years of commitment to customer satisfaction that Culligan is providing this Performance Data Sheet to its customers.

NOTE! Read this Performance Data Sheet and compare the capabilities of this unit with your actual water treatment needs. It is recommended that before purchasing a water treatment unit, you have your water supply tested to determine your actual water treatment needs.

Manufacturer: Culligan International Company
9399 W. Higgins Rd., Suite 1100
Rosemont, IL 60018 USA
(847) 430-2800
www.culligan.com

Product: Culligan Aquasential Select Series 8" and 8" Outdoor Water Softener

Testing Conditions & Results:

Flow Rate:	5.9 gpm @ 12 psi	Capacity:	13,503 grains @ 3.0 lb salt
Pressure:	30 - 40 psi		22,469 grains @ 9.0 lb salt
Acidity:	Non-Corrosive		24,770 grains @ 12.0 lb salt
Temperature:	68˚ (20˚C)	pH:	7.6
Efficiency Rated dosage**:	4,501 gr./lb		

Softener Specifications:

Service Flow Rate:	5.9 gpm (22.3 Lpm)	Pressure Drop at Max. Flow Rate:	12 psi (83 kPa)
Operating Temp. Range:	33 - 120˚F (1 - 50˚C)	Max. Drain Flow Rate:	1.05 gpm (4.0 Lpm)
Working Press. Range:	20 - 125 psi (140 - 860 kPa)	Oper. Press. Range (Canada):	20 - 90 psi (140 - 620 kPa)

Substance Reduction

While testing was performed under standard laboratory conditions, actual performance may vary.

Name of Substance	USEPA Max. Contaminant Level	pH	Flow Rate	Pressure
Barium	2.0 mg/L	7.5 ± 0.5	5.9 gpm	12 (psig)
Radium 226/228	5 pCi/L	7.5 ± 0.5	5.9 gpm	12 (psig)

This system is certified for barium and radium 226/228 reduction based on hardness reduction. It is recommended you test your water every 6 months to ensure the system is performing properly and that hardness, and therefore barium and radium 226/228, are being reduced.

The Culligan Aquasential Select Series 8" and 8" Outdoor Water Softeners have been tested and certified by WQA against NSF/ANSI 372, CSA B483.1, and NSF/ANSI Standard 44 for the effective reduction of hardness (calcium and magnesium), barium, and radium 226/228, as verified and substantiated by test data. To maintain product certification and ensure uniform performance, the product is retested on a consistent basis.

This softener is efficiency rated, it has a Demand Initiated Regeneration (D.I.R) feature which complies with specific performance specifications intended to minimize the amount of regenerant brine and water used in their operation. The softener has a rated salt efficiency of not less than 3350 grains of total hardness exchange per pound of salt used (based on NaCl equivalency), and shall not deliver more salt than its listed rating. The efficiency is measured by a laboratory test described in NSF/ANSI Standard 44. This test represents the maximum possible efficiency that the system can achieve. Operational efficiency is the actual efficiency achieved after the system has been installed. Operational efficiency is typically less than the efficiency due to individual application factors including water hardness, water usage, and other contaminants that reduce the softener's capacity. This model is efficiency rated.

Refer to the Specifications, Familiarization and Warranty section of this Owner's Guide (P/N 01040692) for more specific product information. To avoid contamination from improper handling and installation, your system should only be installed and serviced by your Culligan dealer. Performance will vary based on local water conditions. The substances reduced by this system are not necessarily in your water.

Culligan water softeners are designed to work with any salt of good quality, although it is recommended that you ask your local Culligan dealer for his suggestion on the best type and grade of salt to use in this softener.

NOTE! This softener is not intended to be used for treating water that is microbiologically unsafe or of unknown quality without adequate disinfection before or after the system.

** The efficiency rated dosage is only valid at the 3.0 lb salt dosage.

Culligan Aquasential Select Plus Series 9" and 9" Outdoor Water Softener

Culligan knows the more informed you are about your water treatment systems, the more confident you will be about its performance. It's because of this and more than seventy years of commitment to customer satisfaction that Culligan is providing this Performance Data Sheet to its customers.

NOTE! Read this Performance Data Sheet and compare the capabilities of this unit with your actual water treatment needs. It is recommended that before purchasing a water treatment unit, you have your water supply tested to determine your actual water treatment needs.

Manufacturer: Culligan International Company
9399 W. Higgins Rd., Suite 1100
Rosemont, IL 60018 USA
(847) 430-2800
www.culligan.com

Product: Culligan Aquasential Select Plus Series 9" and 9" Outdoor Water Softener

Testing Conditions & Results:

Flow Rate:	9 gpm @ 15 psi	Capacity:	19,290 grains @ 4.0 lb salt
Pressure:	30 - 40 psi		32,099 grains @ 13.0 lb salt
Acidity:	Non-Corrosive		35,286 grains @ 17.0 lb salt
Temperature:	68˚ (20˚C)	pH:	7.6
Efficiency Rated dosage**:	4,501 gr./lb		

Softener Specifications:

Service Flow Rate:	9.0 gpm (34.1 Lpm)	Pressure Drop at Max. Flow Rate:	15 psi (103 kPa)
Operating Temp. Range:	33 - 120˚F (1 - 50˚C)	Max. Drain Flow Rate:	2.0 gpm (7.6 Lpm)
Working Press. Range:	20 - 125 psi (140 - 860 kPa)	Oper. Press. Range (Canada):	20 - 90 psi (140 - 620 kPa)

Substance Reduction

While testing was performed under standard laboratory conditions, actual performance may vary.

Name of Substance	USEPA Max. Contaminant Level	pH	Flow Rate	Pressure
Barium	2.0 mg/L	7.5 ± 0.5	9 gpm	15 (psig)
Radium 226/228	5 pCi/L	7.5 ± 0.5	9 gpm	15 (psig)

This system is certified for barium and radium 226/228 reduction based on hardness reduction. It is recommended you test your water every 6 months to ensure the system is performing properly and that hardness, and therefore barium and radium 226/228, are being reduced.

The Culligan Aquasential Select Plus Series 9" and 9" Outdoor Water Softeners have been tested and certified by WQA against NSF/ANSI 372, CSA B483.1, and NSF/ANSI Standard 44 for the effective reduction of hardness (calcium and magnesium), barium, and radium 226/228, as verified and substantiated by test data. To maintain product certification and ensure uniform performance, the product is retested on a consistent basis.

This softener is efficiency rated, it has a Demand Initiated Regeneration (D.I.R) feature which complies with specific performance specifications intended to minimize the amount of regenerant brine and water used in their operation. The softener has a rated salt efficiency of not less than 3350 grains of total hardness exchange per pound of salt used (based on NaCl equivalency), and shall not deliver more salt than its listed rating. The efficiency is measured by a laboratory test described in NSF/ANSI Standard 44. This test represents the maximum possible efficiency that the system can achieve. Operational efficiency is the actual efficiency achieved after the system has been installed. Operational efficiency is typically less than the efficiency due to individual application factors including water hardness, water usage, and other contaminants that reduce the softener's capacity. This model is efficiency rated.

Refer to the Specifications, Familiarization and Warranty section of this Owner's Guide (P/N 01040692) for more specific product information. To avoid contamination from improper handling and installation, your system should only be installed and serviced by your Culligan dealer. Performance will vary based on local water conditions. The substances reduced by this system are not necessarily in your water.

Culligan water softeners are designed to work with any salt of good quality, although it is recommended that you ask your local Culligan dealer for his suggestion on the best type and grade of salt to use in this softener.

NOTE! This softener is not intended to be used for treating water that is microbiologically unsafe or of unknown quality without adequate disinfection before or after the system.

** The efficiency rated dosage is only valid at the 4.0 lb salt dosage.

Culligan Aquasential Select Plus Series 10" and 10" Outdoor Water Softener

Culligan knows the more informed you are about your water treatment systems, the more confident you will be about its performance. It's because of this and more than seventy years of commitment to customer satisfaction that Culligan is providing this Performance Data Sheet to its customers.

NOTE! Read this Performance Data Sheet and compare the capabilities of this unit with your actual water treatment needs. It is recommended that before purchasing a water treatment unit, you have your water supply tested to determine your actual water treatment needs.

Manufacturer: Culligan International Company
9399 W. Higgins Rd., Suite 1100
Rosemont, IL 60018 USA
(847) 430-2800
www.culligan.com

Product: Culligan Aquasential Select Plus Series 10" and 10" Outdoor Water Softener

Testing Conditions & Results:

Flow Rate:	9.3 gpm @ 15 psi	Capacity:	29,664 grains @ 6.0 lb salt
Pressure:	30 - 40 psi		43,694 grains @ 12.0 lb salt
Acidity:	Non-Corrosive		47,736 grains @ 18.0 lb salt
Temperature:	68˚ (20˚C)	pH:	7.6
Efficiency Rated dosage**:	4,944 gr./lb		

Softener Specifications:

Service Flow Rate:	9.3 gpm (35.2 Lpm)	Pressure Drop at Max. Flow Rate:	15 psi (103 kPa)
Operating Temp. Range:	33 - 120˚F (1 - 50˚C)	Max. Drain Flow Rate:	2.26 gpm (8.6 Lpm)
Working Press. Range:	20 - 125 psi (140 - 860 kPa)	Oper. Press. Range (Canada):	20 - 90 psi (140 - 620 kPa)

Substance Reduction

While testing was performed under standard laboratory conditions, actual performance may vary.

Name of Substance	USEPA Max. Contaminant Level	pH	Flow Rate	Pressure
Barium	2.0 mg/L	7.5 ± 0.5	9.3 gpm	15 (psig)
Radium 226/228	5 pCi/L	7.5 ± 0.5	9.3 gpm	15 (psig)

This system is certified for barium and radium 226/228 reduction based on hardness reduction. It is recommended you test your water every 6 months to ensure the system is performing properly and that hardness, and therefore barium and radium 226/228, are being reduced.

The Culligan Aquasential Select Plus Series 10" and 10" Outdoor Water Softeners have been tested and certified by WQA against NSF/ANSI 372, CSA B483.1, and NSF/ANSI Standard 44 for the effective reduction of hardness (calcium and magnesium), barium, and radium 226/228, as verified and substantiated by test data. To maintain product certification and ensure uniform performance, the product is retested on a consistent basis.

This softener is efficiency rated, it has a Demand Initiated Regeneration (D.I.R) feature which complies with specific performance specifications intended to minimize the amount of regenerant brine and water used in their operation. The softener has a rated salt efficiency of not less than 3350 grains of total hardness exchange per pound of salt used (based on NaCl equivalency), and shall not deliver more salt than its listed rating. The efficiency is measured by a laboratory test described in NSF/ANSI Standard 44. This test represents the maximum possible efficiency that the system can achieve. Operational efficiency is the actual efficiency achieved after the system has been installed. Operational efficiency is typically less than the efficiency due to individual application factors including water hardness, water usage, and other contaminants that reduce the softener's capacity. This model is efficiency rated.

Refer to the Specifications, Familiarization and Warranty section of this Owner's Guide (P/N 01040692) for more specific product information. To avoid contamination from improper handling and installation, your system should only be installed and serviced by your Culligan dealer. Performance will vary based on local water conditions. The substances reduced by this system are not necessarily in your water.

Culligan water softeners are designed to work with any salt of good quality, although it is recommended that you ask your local Culligan dealer for his suggestion on the best type and grade of salt to use in this softener.

NOTE! This softener is not intended to be used for treating water that is microbiologically unsafe or of unknown quality without adequate disinfection before or after the system.

** The efficiency rated dosage is only valid at the 6.0 lb salt dosage.

Culligan Aquasential Select Plus Series 12" and 12" Outdoor Water Softener

Culligan knows the more informed you are about your water treatment systems, the more confident you will be about its performance. It's because of this and more than seventy years of commitment to customer satisfaction that Culligan is providing this Performance Data Sheet to its customers.

NOTE! Read this Performance Data Sheet and compare the capabilities of this unit with your actual water treatment needs. It is recommended that before purchasing a water treatment unit, you have your water supply tested to determine your actual water treatment needs.

Manufacturer: Culligan International Company
9399 W. Higgins Rd., Suite 1100
Rosemont, IL 60018 USA
(847) 430-2800
www.culligan.com

Product: Culligan Aquasential Select Series 12" and 12" Outdoor Water Softener

Testing Conditions & Results:

Flow Rate:	10 gpm @ 15 psi	Capacity:	37,866 grains @ 8.0 lb salt
Pressure:	30 - 40 psi		55,815 grains @ 16.0 lb salt
Acidity:	Non-Corrosive		65,599 grains @ 24.0 lb salt
Temperature:	68˚ (20˚C)	pH:	7.6
Efficiency Rated dosage**:	4,733 gr./lb		

Softener Specifications:

Service Flow Rate:	10 gpm (37.9 Lpm)	Pressure Drop at Max. Flow Rate:	15 psi (103 kPa)
Operating Temp. Range:	33 - 120˚F (1 - 50˚C)	Max. Drain Flow Rate:	3.96 gpm (15 Lpm)
Working Press. Range:	20 - 125 psi (140 - 860 kPa)	Oper. Press. Range (Canada):	20 - 90 psi (140 - 620 kPa)

Substance Reduction

While testing was performed under standard laboratory conditions, actual performance may vary.

Name of Substance	USEPA Max. Contaminant Level	pH	Flow Rate	Pressure
Barium	2.0 mg/L	7.5 ± 0.5	10 gpm	15 (psig)
Radium 226/228	5 pCi/L	7.5 ± 0.5	10 gpm	15 (psig)

This system is certified for barium and radium 226/228 reduction based on hardness reduction. It is recommended you test your water every 6 months to ensure the system is performing properly and that hardness, and therefore barium and radium 226/228, are being reduced.

The Culligan Aquasential Select Plus Series 12" and 12" Outdoor Water Softeners have been tested and certified by WQA against NSF/ANSI 372, CSA B483.1, and NSF/ANSI Standard 44 for the effective reduction of hardness (calcium and magnesium), barium, and radium 226/228, as verified and substantiated by test data. To maintain product certification and ensure uniform performance, the product is retested on a consistent basis.

This softener is efficiency rated, it has a Demand Initiated Regeneration (D.I.R.) feature which complies with specific performance specifications intended to minimize the amount of regenerant brine and water used in their operation. The softener has a rated salt efficiency of not less than 3350 grains of total hardness exchange per pound of salt used (based on NaCl equivalency), and shall not deliver more salt than its listed rating. The efficiency is measured by a laboratory test described in NSF/ANSI Standard 44. This test represents the maximum possible efficiency that the system can achieve. Operational efficiency is the actual efficiency achieved after the system has been installed. Operational efficiency is typically less than the efficiency due to individual application factors including water hardness, water usage, and other contaminants that reduce the softener's capacity.

Refer to the Specifications, Familiarization and Warranty section of this Owner's Guide (P/N 01040692) for more specific product information. To avoid contamination from improper handling and installation, your system should only be installed and serviced by your Culligan dealer. Performance will vary based on local water conditions. The substances reduced by this system are not necessarily in your water.

Culligan water softeners are designed to work with any salt of good quality, although it is recommended that you ask your local Culligan dealer for his suggestion on the best type and grade of salt to use in this softener.

NOTE! This softener is not intended to be used for treating water that is microbiologically unsafe or of unknown quality without adequate disinfection before or after the system.

** The efficiency rated dosage is only valid at the 3.0 lb salt dosage.

Culligan Aquasential Select Series 9" S Water Softener

Culligan knows the more informed you are about your water treatment systems, the more confident you will be about its performance. It's because of this and more than seventy years of commitment to customer satisfaction that Culligan is providing this Performance Data Sheet to its customers.

NOTE! Read this Performance Data Sheet and compare the capabilities of this unit with your actual water treatment needs. It is recommended that before purchasing a water treatment unit, you have your water supply tested to determine your actual water treatment needs.

Manufacturer: Culligan International Company
9399 W. Higgins Rd., Suite 1100
Rosemont, IL 60018 USA
(847) 430-2800
www.culligan.com

Product: Culligan Aquasential Select Series 9" S Water Softener

Testing Conditions & Results:

Flow Rate:	7.6 gpm @ 15 psi	Capacity:	4,329 grains @ 3.0 lb salt
Pressure:	30 - 40 psi		5,484 grains @ 5.0 lb salt
Acidity:	Non-Corrosive		6,563 grains @ 7.0 lb salt
Temperature:	68˚ (20˚C)	pH:	7.6

Softener Specifications:

Service Flow Rate:	7.6 gpm (28.8 Lpm)	Pressure Drop at Max. Flow Rate:	15 psi (103 kPa)
Operating Temp. Range:	33 - 120˚F (1 - 50˚C)	Max. Drain Flow Rate:	1.29 gpm (4.9 Lpm)
Working Press. Range:	20 - 125 psi (140 - 860 kPa)	Oper. Press. Range (Canada):	20 - 90 psi (140 - 620 kPa)

Substance Reduction

While testing was performed under standard laboratory conditions, actual performance may vary.

Name of Substance	USEPA Max. Contaminant Level	pH	Flow Rate	Pressure
Barium	2.0 mg/L	7.5 ± 0.5	7.6 gpm	15 (psig)
Radium 226/228	5 pCi/L	7.5 ± 0.5	7.6 gpm	15 (psig)

This system is certified for barium and radium 226/228 reduction based on hardness reduction. It is recommended you test your water every 6 months to ensure the system is performing properly and that hardness, and therefore barium and radium 226/228, are being reduced.

The Culligan Aquasential Select Series 9" S Water Softener has been tested and certified by WQA against NSF/ANSI 372, CSA B483.1, and NSF/ANSI Standard 44 for the effective reduction of hardness (calcium and magnesium), barium, and radium 226/228, as verified and substantiated by test data. To maintain product certification and ensure uniform performance, the product is retested on a consistent basis.

Refer to the Specifications, Familiarization and Warranty section of this Owner's Guide (P/N 01040692) for more specific product information. To avoid contamination from improper handling and installation, your system should only be installed and serviced by your Culligan dealer. Performance will vary based on local water conditions. The substances reduced by this system are not necessarily in your water.

Culligan water softeners are designed to work with any salt of good quality, although it is recommended that you ask your local Culligan dealer for his suggestion on the best type and grade of salt to use in this softener.

NOTE! This softener is not intended to be used for treating water that is microbiologically unsafe or of unknown quality without adequate disinfection before or after the system.

Culligan Aquasential Select Plus Series 10" S Water Softener

Culligan knows the more informed you are about your water treatment systems, the more confident you will be about its performance. It's because of this and more than seventy years of commitment to customer satisfaction that Culligan is providing this Performance Data Sheet to its customers.

NOTE! Read this Performance Data Sheet and compare the capabilities of this unit with your actual water treatment needs. It is recommended that before purchasing a water treatment unit, you have your water supply tested to determine your actual water treatment needs.

Manufacturer: Culligan International Company
9399 W. Higgins Rd., Suite 1100
Rosemont, IL 60018 USA
(847) 430-2800
www.culligan.com

Product: Culligan Aquasential Select Plus Series 10" S Water Softener

Testing Conditions & Results:

Flow Rate:	7.5 gpm @ 15 psi	Capacity:	18,863 grains @ 4.0 lb salt
Pressure:	30 - 40 psi		31,389 grains @ 13.0 lb salt
Acidity:	Non-Corrosive		34,603 grains @ 17.0 lb salt
Temperature:	68˚ (20˚C)	pH:	7.6
Efficiency Rated dosage**:	4,401 gr./lb		

Softener Specifications:

Service Flow Rate:	7.5 gpm (28.4 Lpm)	Pressure Drop at Max. Flow Rate:	15 psi (103 kPa)
Operating Temp. Range:	33 - 120˚F (1 - 50˚C)	Max. Drain Flow Rate:	2.0 gpm (7.6 Lpm)
Working Press. Range:	20 - 125 psi (140 - 860 kPa)	Oper. Press. Range (Canada):	20 - 90 psi (140 - 620 kPa)

Substance Reduction

While testing was performed under standard laboratory conditions, actual performance may vary.

Name of Substance	USEPA Max. Contaminant Level	pH	Flow Rate	Pressure
Barium	2.0 mg/L	7.5 ± 0.5	7.5 gpm	15 (psig)
Radium 226/228	5 pCi/L	7.5 ± 0.5	7.5 gpm	15 (psig)

This system is certified for barium and radium 226/228 reduction based on hardness reduction. It is recommended you test your water every 6 months to ensure the system is performing properly and that hardness, and therefore barium and radium 226/228, are being reduced.

The Culligan Aquasential Select Plus Series 10" S Water Softener has been tested and certified by WQA against NSF/ANSI 372, CSA B483.1, and NSF/ANSI Standard 44 for the effective reduction of hardness (calcium and magnesium), barium, and radium 226/228, as verified and substantiated by test data. To maintain product certification and ensure uniform performance, the product is retested on a consistent basis.

This softener is efficiency rated, it has a Demand Initiated Regeneration (D.I.R.) feature which complies with specific performance specifications intended to minimize the amount of regenerant brine and water used in their operation. The softener has a rated salt efficiency of not less than 3350 grains of total hardness exchange per pound of salt used (based on NaCl equivalency), and shall not deliver more salt than its listed rating. The efficiency is measured by a laboratory test described in NSF/ANSI Standard 44. This test represents the maximum possible efficiency that the system can achieve. Operational efficiency is the actual efficiency achieved after the system has been installed. Operational efficiency is typically less than the efficiency due to individual application factors including water hardness, water usage, and other contaminants that reduce the softener's capacity.

Refer to the Specifications, Familiarization and Warranty section of this Owner's Guide (P/N 01040692) for more specific product information. To avoid contamination from improper handling and installation, your system should only be installed and serviced by your Culligan dealer. Performance will vary based on local water conditions. The substances reduced by this system are not necessarily in your water.

Culligan water softeners are designed to work with any salt of good quality, although it is recommended that you ask your local Culligan dealer for his suggestion on the best type and grade of salt to use in this softener.

NOTE! This softener is not intended to be used for treating water that is microbiologically unsafe or of unknown quality without adequate disinfection before or after the system.

** The efficiency rated dosage is only valid at the 4.0 lb salt dosage.

Culligan Aquasential Select Plus Series CleanWater Home 9" and CleanWater Home 9" Outdoor Water Softener

Culligan knows the more informed you are about your water treatment systems, the more confident you will be about its performance. It's because of this and more than seventy years of commitment to customer satisfaction that Culligan is providing this Performance Data Sheet to its customers.

NOTE! Read this Performance Data Sheet and compare the capabilities of this unit with your actual water treatment needs. It is recommended that before purchasing a water treatment unit, you have your water supply tested to determine your actual water treatment needs.

Manufacturer: Culligan International Company
9399 W. Higgins Rd., Suite 1100
Rosemont, IL 60018 USA
(847) 430-2800
www.culligan.com

Product: Culligan Aquasential Select Plus Series CleanWater Home 9" and CleanWater Home 9" Outdoor Water Softener

Testing Conditions & Results:

Flow Rate:	9 gpm @ 15 psi	Capacity:	19,290 grains @ 4.0 lb salt
Pressure:	30 - 40 psi		32,099 grains @ 13.0 lb salt
Acidity:	Non-Corrosive		35,286 grains @ 17.0 lb salt
Temperature:	68˚ (20˚C)	pH:	7.6
Efficiency Rated dosage**:	4,501 gr./lb		

Softener Specifications:

Service Flow Rate:	9 gpm (34.1 Lpm)	Pressure Drop at Max. Flow Rate:	15 psi (103 kPa)
Operating Temp. Range:	33 - 120˚F (1 - 50˚C)	Max. Drain Flow Rate:	2.0 gpm (7.6 Lpm)
Working Press. Range:	20 - 125 psi (140 - 860 kPa)	Oper. Press. Range (Canada):	20 - 90 psi (140 - 620 kPa)

Substance Reduction

While testing was performed under standard laboratory conditions, actual performance may vary.

Name of Substance	USEPA Max. Contaminant Level	pH	Flow Rate	Pressure
Barium	2.0 mg/L	7.5 ± 0.5	9 gpm	15 (psig)
Radium 226/228	5 pCi/L	7.5 ± 0.5	9 gpm	15 (psig)

This system is certified for barium and radium 226/228 reduction based on hardness reduction. It is recommended you test your water every 6 months to ensure the system is performing properly and that hardness, and therefore barium and radium 226/228, are being reduced.

The Culligan Aquasential Select Plus Series CleanWater Home 9" and CleanWater Home 9" Outdoor Water Softeners have been tested and certified by WQA against NSF/ANSI 372, CSA B483.1, and NSF/ANSI Standard 44 for the effective reduction of hardness (calcium and magnesium), barium, and radium 226/228, as verified and substantiated by test data. To maintain product certification and ensure uniform performance, the product is retested on a consistent basis.

This softener is efficiency rated, it has a Demand Initiated Regeneration (D.I.R.) feature which complies with specific performance specifications intended to minimize the amount of regenerant brine and water used in their operation. The softener has a rated salt efficiency of not less than 3350 grains of total hardness exchange per pound of salt used (based on NaCl equivalency), and shall not deliver more salt than its listed rating. The efficiency is measured by a laboratory test described in NSF/ANSI Standard 44. This test represents the maximum possible efficiency that the system can achieve. Operational efficiency is the actual efficiency achieved after the system has been installed. Operational efficiency is typically less than the efficiency due to individual application factors including water hardness, water usage, and other contaminants that reduce the softener's capacity.

Refer to the Specifications, Familiarization and Warranty section of this Owner's Guide (P/N 01040692) for more specific product information. To avoid contamination from improper handling and installation, your system should only be installed and serviced by your Culligan dealer. Performance will vary based on local water conditions. The substances reduced by this system are not necessarily in your water.

Culligan water softeners are designed to work with any salt of good quality, although it is recommended that you ask your local Culligan dealer for his suggestion on the best type and grade of salt to use in this softener.

NOTE! This softener is not intended to be used for treating water that is microbiologically unsafe or of unknown quality without adequate disinfection before or after the system.

** The efficiency rated dosage is only valid at the 4.0 lb salt dosage.

Culligan Aquasential Select Plus Series CleanWater Home 10" and CleanWater Home 10" Outdoor Water Softener

Culligan knows the more informed you are about your water treatment systems, the more confident you will be about its performance. It's because of this and more than seventy years of commitment to customer satisfaction that Culligan is providing this Performance Data Sheet to its customers.

NOTE! Read this Performance Data Sheet and compare the capabilities of this unit with your actual water treatment needs. It is recommended that before purchasing a water treatment unit, you have your water supply tested to determine your actual water treatment needs.

Manufacturer: Culligan International Company
9399 W. Higgins Rd., Suite 1100
Rosemont, IL 60018 USA
(847) 430-2800
www.culligan.com

Product: Culligan Aquasential Select Plus Series CleanWater Home 10" and CleanWater Home 10" Outdoor Water Softener

Testing Conditions & Results:

Flow Rate:	9.3 gpm @ 15 psi	Capacity:	29,664 grains @ 6.0 lb salt
Pressure:	30 - 40 psi		43,694 grains @ 12.0 lb salt
Acidity:	Non-Corrosive		47,736 grains @ 18.0 lb salt
Temperature:	68˚ (20˚C)	pH:	7.6
Efficiency Rated dosage**:	4,944 gr./lb		

Softener Specifications:

Service Flow Rate:	9.3 gpm (35.2 Lpm)	Pressure Drop at Max. Flow Rate:	15 psi (103 kPa)
Operating Temp. Range:	33 - 120˚F (1 - 50˚C)	Max. Drain Flow Rate:	2.26 gpm (8.6 Lpm)
Working Press. Range:	20 - 125 psi (140 - 860 kPa)	Oper. Press. Range (Canada):	20 - 90 psi (140 - 620 kPa)

Substance Reduction

While testing was performed under standard laboratory conditions, actual performance may vary.

Name of Substance	USEPA Max. Contaminant Level	pH	Flow Rate	Pressure
Barium	2.0 mg/L	7.5 ± 0.5	9.3 gpm	15 (psig)
Radium 226/228	5 pCi/L	7.5 ± 0.5	9.3 gpm	15 (psig)

This system is certified for barium and radium 226/228 reduction based on hardness reduction. It is recommended you test your water every 6 months to ensure the system is performing properly and that hardness, and therefore barium and radium 226/228, are being reduced.

The Culligan Aquasential Select Plus Series CleanWater Home 10" and CleanWater Home 10" Outdoor Water Softeners have been tested and certified by WQA against NSF/ANSI 372, CSA B483.1, and NSF/ANSI Standard 44 for the effective reduction of hardness (calcium and magnesium), barium, and radium 226/228, as verified and substantiated by test data. To maintain product certification and ensure uniform performance, the product is retested on a consistent basis.

This softener is efficiency rated, it has a Demand Initiated Regeneration (D.I.R) feature which complies with specific performance specifications intended to minimize the amount of regenerant brine and water used in their operation. The softener has a rated salt efficiency of not less than 3350 grains of total hardness exchange per pound of salt used (based on NaCl equivalency), and shall not deliver more salt than its listed rating. The efficiency is measured by a laboratory test described in NSF/ANSI Standard 44. This test represents the maximum possible efficiency that the system can achieve. Operational efficiency is the actual efficiency achieved after the system has been installed. Operational efficiency is typically less than the efficiency due to individual application factors including water hardness, water usage, and other contaminants that reduce the softener's capacity. This model is efficiency rated.

Refer to the Specifications, Familiarization and Warranty section of this Owner's Guide (P/N 01040692) for more specific product information. To avoid contamination from improper handling and installation, your system should only be installed and serviced by your Culligan dealer. Performance will vary based on local water conditions. The substances reduced by this system are not necessarily in your water.

Culligan water softeners are designed to work with any salt of good quality, although it is recommended that you ask your local Culligan dealer for his suggestion on the best type and grade of salt to use in this softener.

NOTE! This softener is not intended to be used for treating water that is microbiologically unsafe or of unknown quality without adequate disinfection before or after the system.

** The efficiency rated dosage is only valid at the 6.0 lb salt dosage.

Records & Data

Important Information about your Culligan Water Softening System

Please fill in the information below for future reference. If you have any questions regarding your Culligan water system, please contact the dealer that installed your system for assistance.

Addition information may also be found by visiting: www.culligan.com

System and Dealer Identification

System Name _____ Model Name: _____

Control Valve Model # _____ Control Valve Serial # _____

Date of Installation: _____ Tank Serial # _____

Culligan Dealer: _____ City/Town: _____

Dealer Phone # _____ State: _____

System Settings

Time of Recharge _____ AM/PM

Gallons Capacity Per Regeneration: _____

Day Override / Interval: _____

Salt Tank Capacity: _____

Recommended Culligan Service Interval:

Annual: _____ Bi-Annual: _____

Owner Maintenance:

_____ Check Salt Level

_____ Replace Cartridge Filter(s)

_____ Add Resin Cleaner

Water Analysis

Hardness _____ grains/gallon

pH level (acidity) _____ S.U.

Chloride _____ mg/l

Sodium _____ mg/l

Total Dissolved Solids - TDS _____ mg/l

Alkalinity _____ grains/gallon

Manganese _____ mg/l

Hydrogen Sulfide (H_2S) _____ mg/l

NOTE! **mg/l (milligrams per liter) and ppm (parts per million) are equivalent units of measurement**
1 grain = 17.1 mg/l

Culligan Limited Warranty

Culligan Water Treatment System

You have just purchased one of the finest water filters made. As an expression of our confidence in Culligan International Company products, your water filter is warranted to the original end-user, when installed in accordance with Culligan specifications, against defects in material and workmanship from the date of original installation, as follows:

For the LIFETIME of the original consumer purchaser	• The Cullex® resin
For a period of TEN YEARS	• The control valve body, excluding internal parts • The softener tank • The salt storage tank, brine valve and all its component parts
For a period of FIVE YEARS	• The AccuSoft® circuit board, or Soft-Minder® meter, if so equipped
For a period of ONE YEAR	• The entire softener

If a part described above is found defective within the specified period, you should notify your independently operated Culligan dealer and arrange a time during normal business hours for the dealer to inspect the water treatment unit on your premises. Any part found defective within the terms of this warranty will be repaired or replaced by the dealer. You pay only freight from our factory and local dealer charges.

We are not responsible for damage caused by accident, fire, flood, freezing, Act of God, misuse, misapplication, neglect, oxidizing agents (such as chlorine, ozone, chloramines and other related components), alteration, installation or operation contrary to our written instructions, or by the use of accessories or components which do not meet Culligan specifications, is not covered by this warranty. Warranty is void if system is installed outside a building without being rated for outdoor use. Refer to the specifications section in the Installation and Operating manual for application parameters.

Our product performance specifications are furnished with each water filter unit. To the extent permitted by law, culligan disclaims all implied warranties, including without limitation warranties of merchantability and fitness for particular purpose; to the extent required by law, any such implied warranties are limited in duration to the one-year period specified above for the entire conditioner. As a manufacturer, we do not know the characteristics of your water supply or the purpose for which you are purchasing a water filter. The quality of water supplies may vary seasonally or over a period of time, and your water usage rate may vary as well. Water characteristics can also differ considerably if your water filter is moved to a new location. For these reasons, we assume no liability for the determination of the proper equipment necessary to meet your requirements, and we do not authorize others to assume such obligations for us. Further, we assume no liability and extend no warranties, express or implied, for the use of this product with a non-potable water source. Our obligations under this warranty are limited to the repair or replacement of the failed parts of the water filter, and we assume no liability whatsoever for direct, indirect, incidental, consequential, special, general, or other damages.

Some states do not allow the exclusion of implied warranties or limitations on how long an implied warranty lasts, so the above limitation may not apply to you. Similarly, some states do not allow the exclusion of incidental or consequential damages, so the above limitation or exclusion may not apply to you. This warranty gives you specific legal rights, and you may also have other rights which vary from state to state. Consult your telephone directory for your local independently operated Culligan dealer, or write Culligan International Company for warranty and service information.

Culligan International Company
9399 W. Higgins Rd., Suite 1100
Rosemont, IL 60018 USA
1-800-CULLIGAN or 1-847-430-2800
www.culligan.com